ARIZONA CORRECTIONAL INDUSTRIES

MPDC-5011 Dip Station

Exercise Equipment

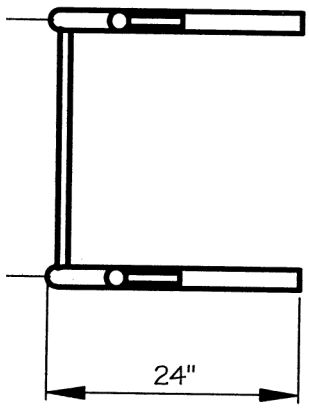

Plan View

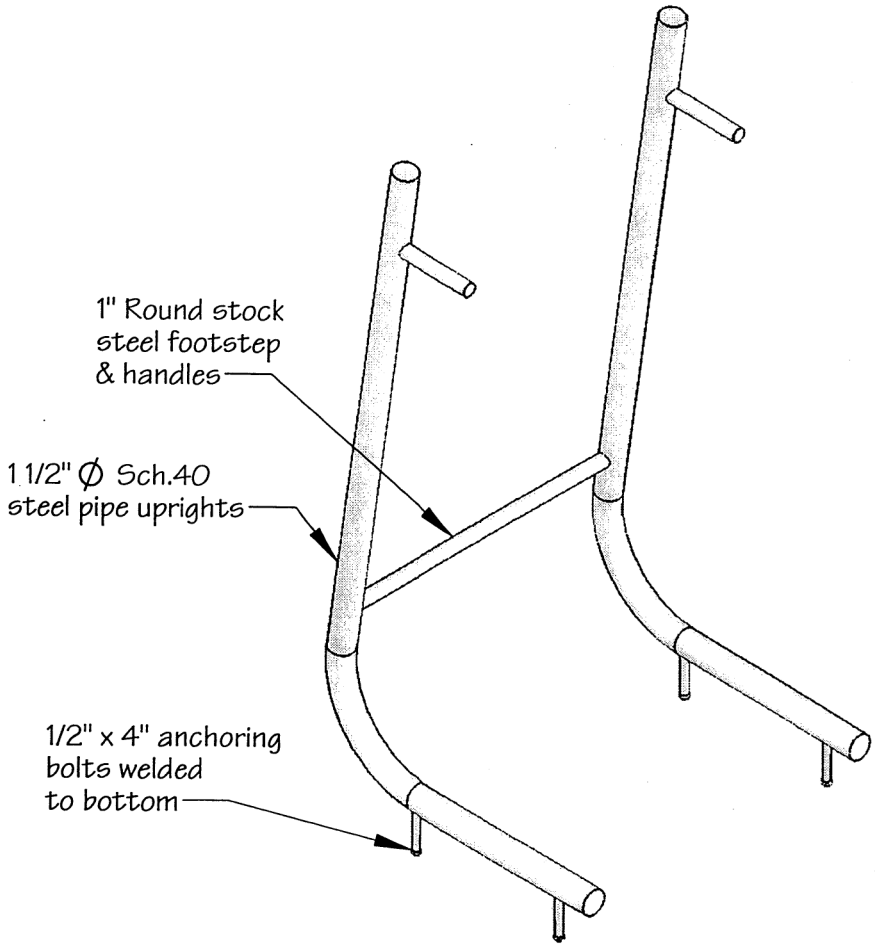

Isometric View of Dip Station

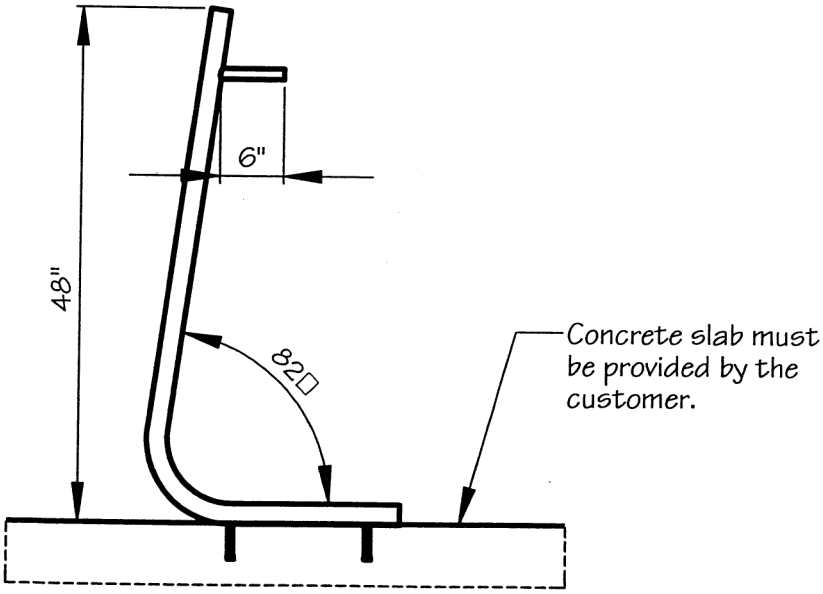

Side Elevation

Arizona Correctional Industries
3279 East Harbour Drive
Phoenix, AZ 85034

602 272-7600
602 272-1007 (fax)
www.aci.az.gov