ARIZONA CORRECTIONAL INDUSTRIES

Exercise Equipment

MPDC-5017 Stair-Step Station

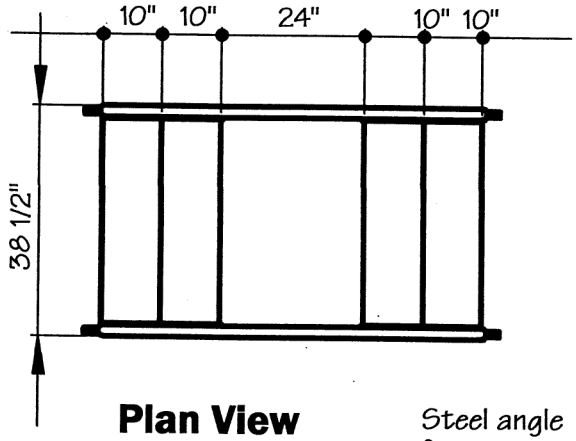

Plan View

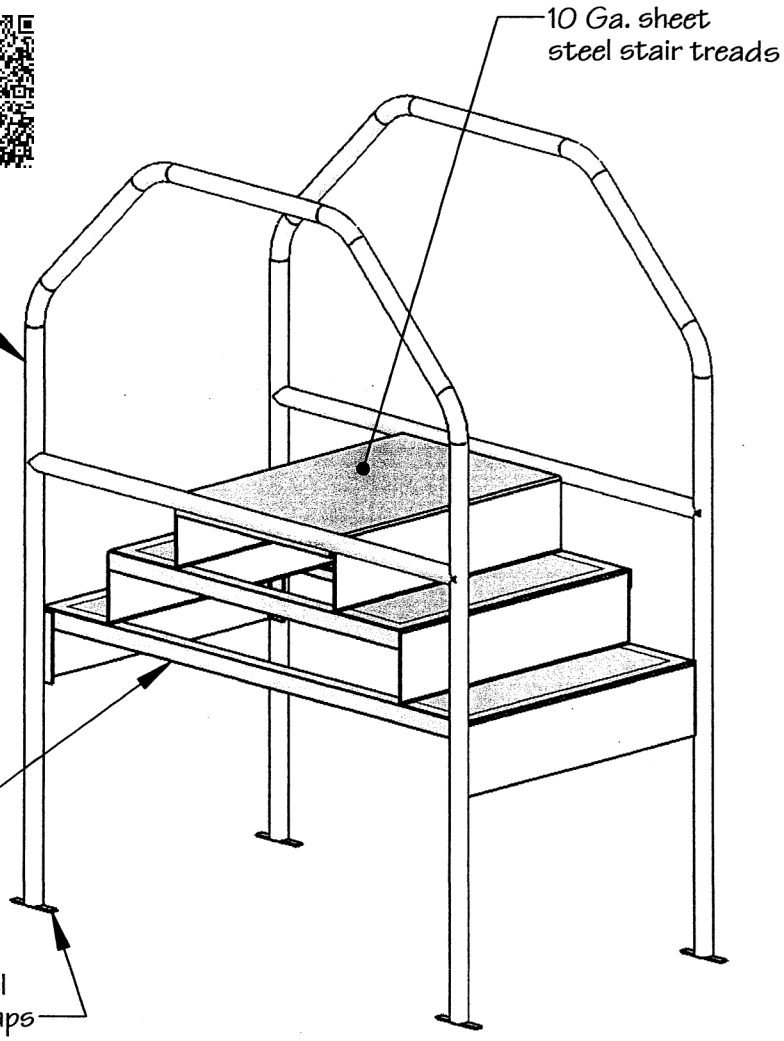

Isometric View of Stair Step Station

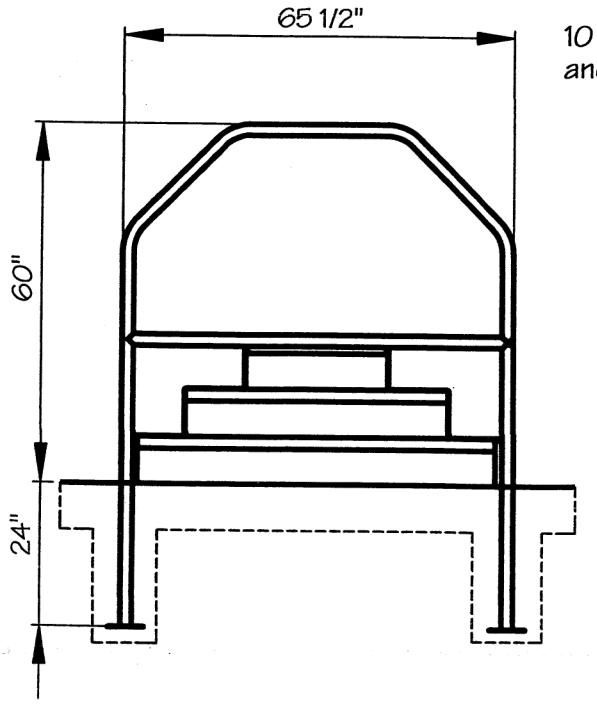

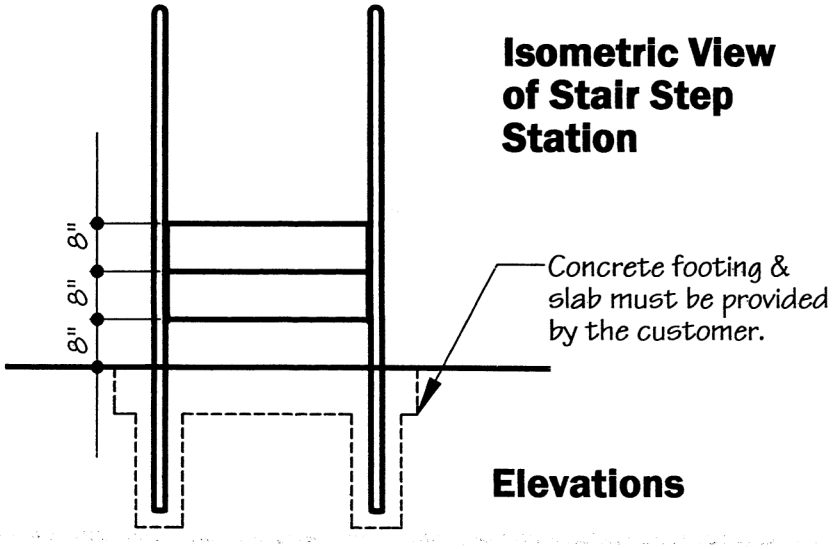

Elevations

Arizona Correctional Industries
3279 East Harbour Drive
Phoenix, AZ 85034

602 272-7600
602 272-1007 (fax)
www.aci.az.gov