ARIZONA CORRECTIONAL INDUSTRIES™

Outdoor Furnishings

MPPR4308SMP High Security Bike Rack Solid Mount

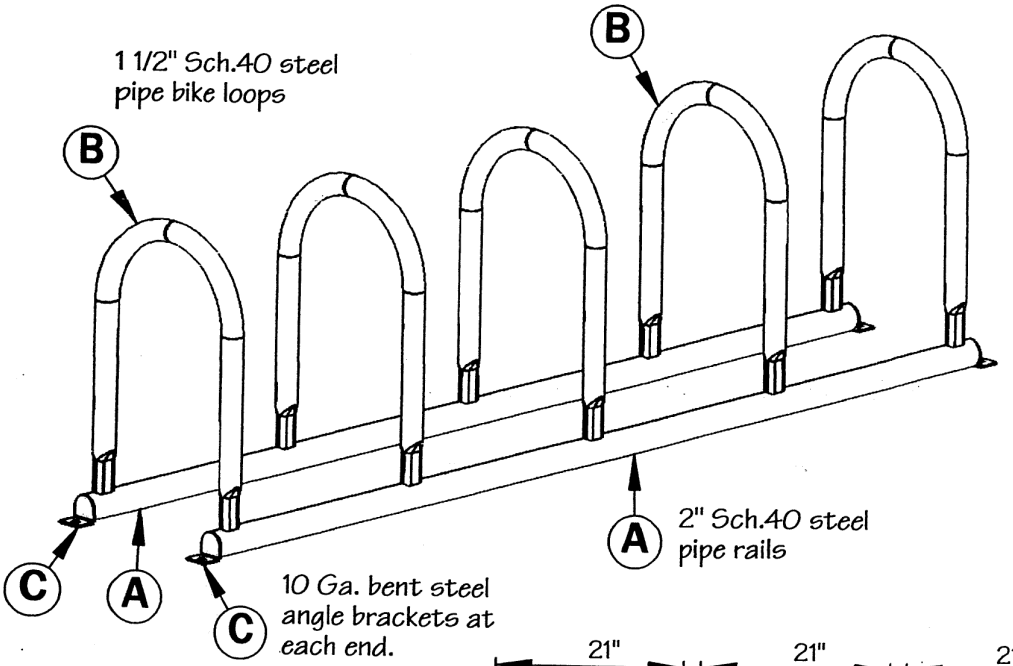

Isometric View of High Security Bike Rack

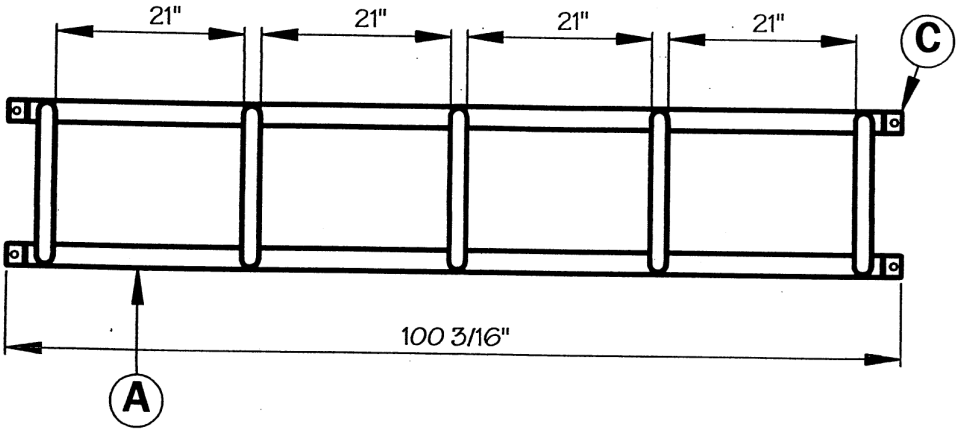

Plan View

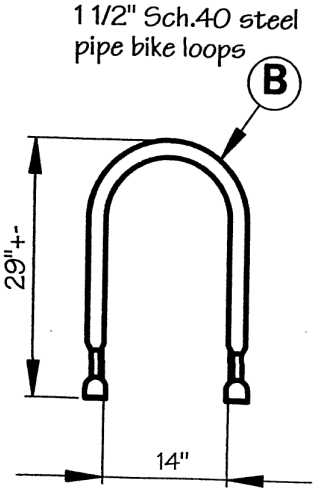

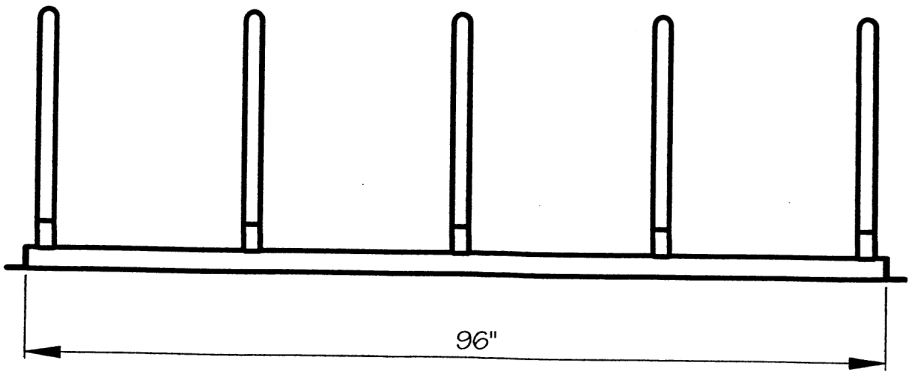

Elevations

Arizona Correctional Industries
3279 East Harbour Drive
Phoenix, AZ 85034

602 272-7600
602 272-1007 (fax)
www.aci.az.gov