ARIZONA CORRECTIONAL INDUSTRIES

Outdoor Furnishings

MPPRFIRERINGGRILL Grill for 24” Fire Ring

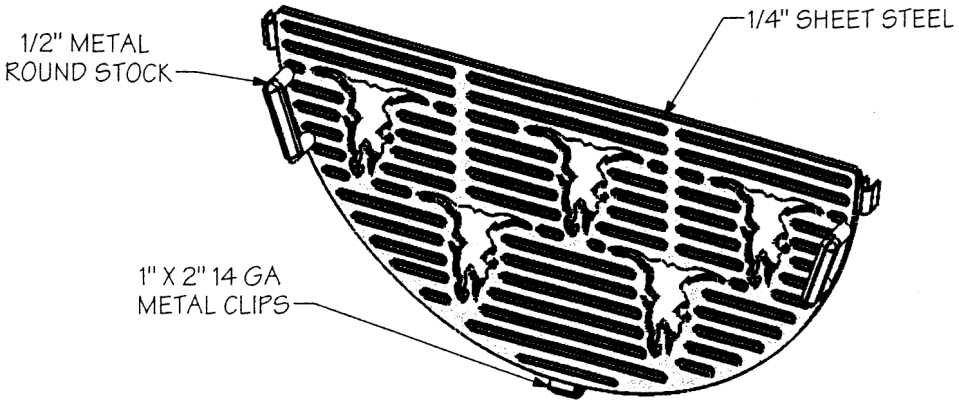

ISOMETRIC VIEW OF Ⓐ GRILL

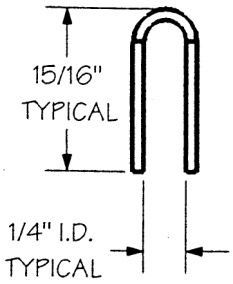

Ⓑ MOUNTING CLIP

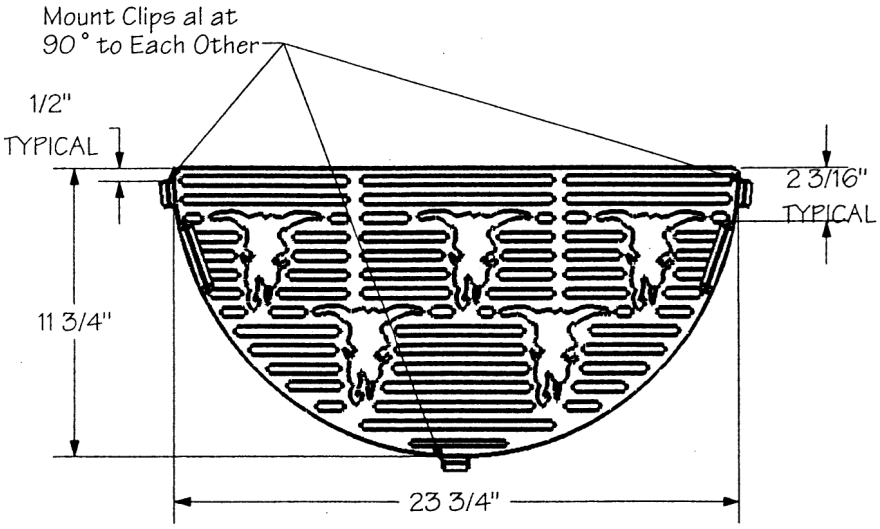

PLAN VIEW

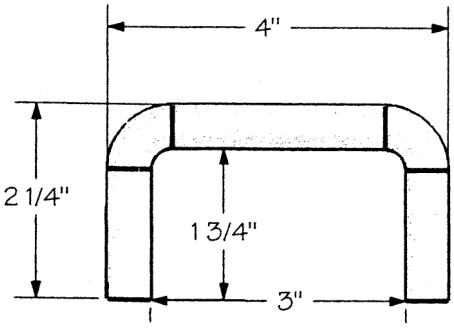

Ⓒ HANDLE

Arizona Correctional Industries
3279 East Harbour Drive
Phoenix, AZ 85034

602 272-7600
602 272-1007 (fax)
www.aci.az.gov